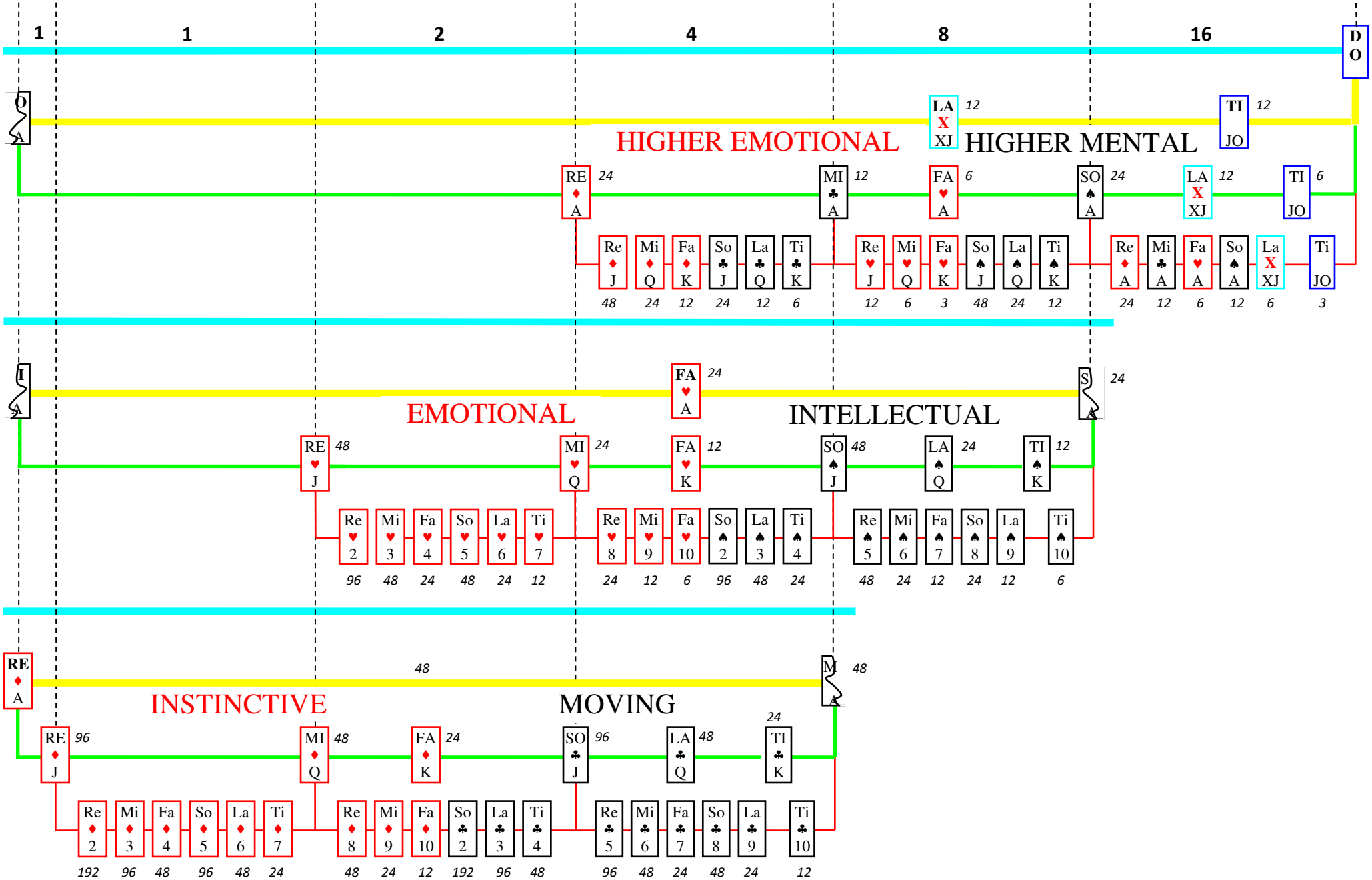
1
1
2
4
8
16
DO
HIGHER EMOTIONAL
HIGHER MENTAL
EMOTIONAL
INTELLECTUAL
INSTINCTIVE
MOVING