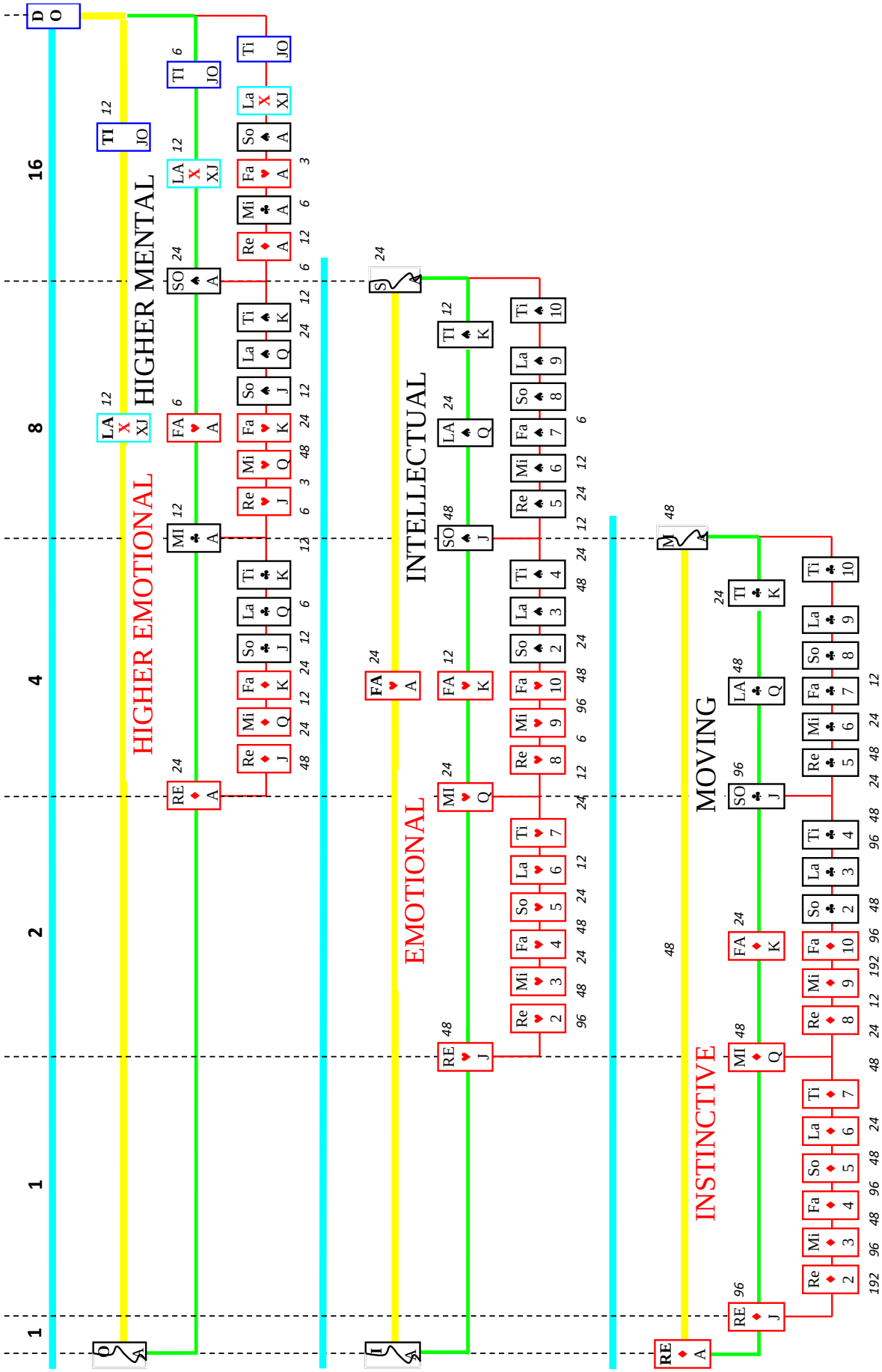Extra - Lengths-Speeds